Name .....

4-figure Grid References

Class .....

Many maps have a **grid** of lines printed over them. The lines go across and down. Each line has a number. These numbers can be used to show the position of something on the map. We do this by finding the **grid reference**.

How to find a four-figure grid reference

1 Choose the square you want to find the reference of.

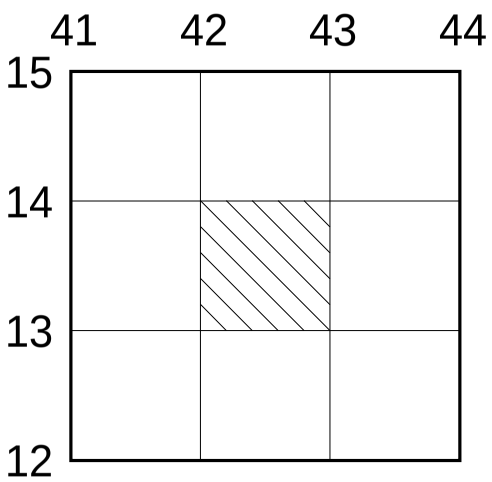

2 Find the bottom left corner of the square.

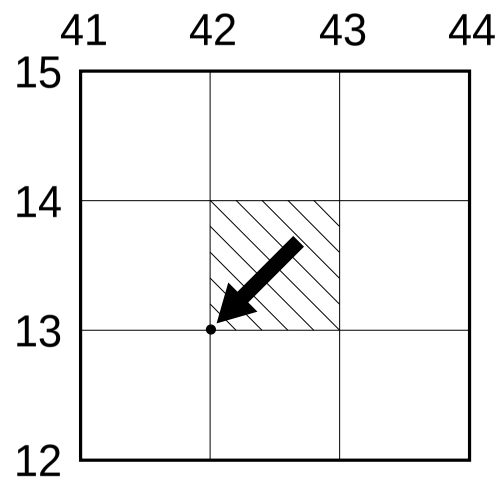

3 Start at the bottom left corner and look up the line until you reach a number. This is the first number. The first number in this example is 42.

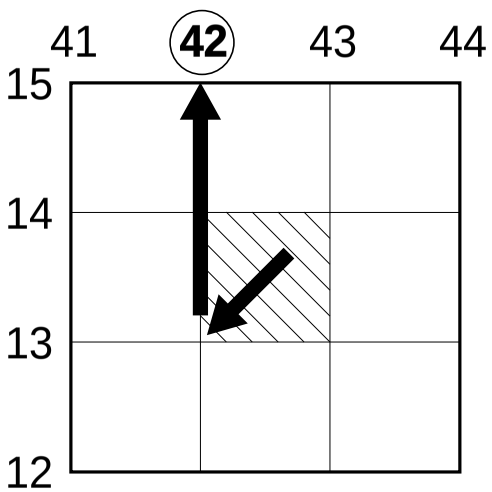

4 Start at the bottom left corner and look across until you reach a number. This is the second number. The second number in this example is 13.

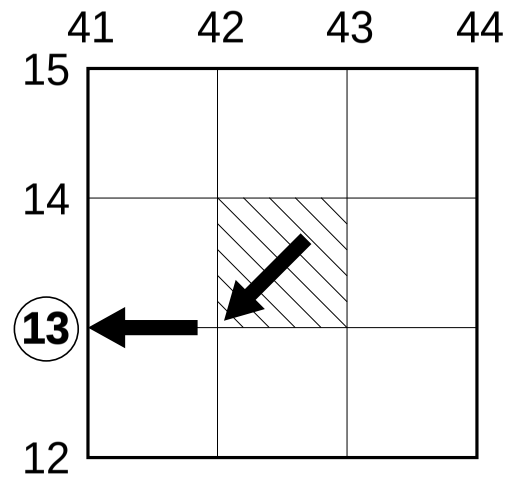

5 Put the two numbers together to find the grid reference – **4213**.

Remember, always put the number from the top or bottom of the map first, and the number from the side of the map second.

Here is a larger map. Write down the four-figure grid references for the following features:

1 The village of Barham _____
2 The village of Farthing _____
3 The village of Longton _____
4 Round Wood _____
5 Long Wood _____
6 The Windmill _____
7 Fallow Hill _____
8 The Lake _____
9 Mill Farm _____
10 Willow Farm _____

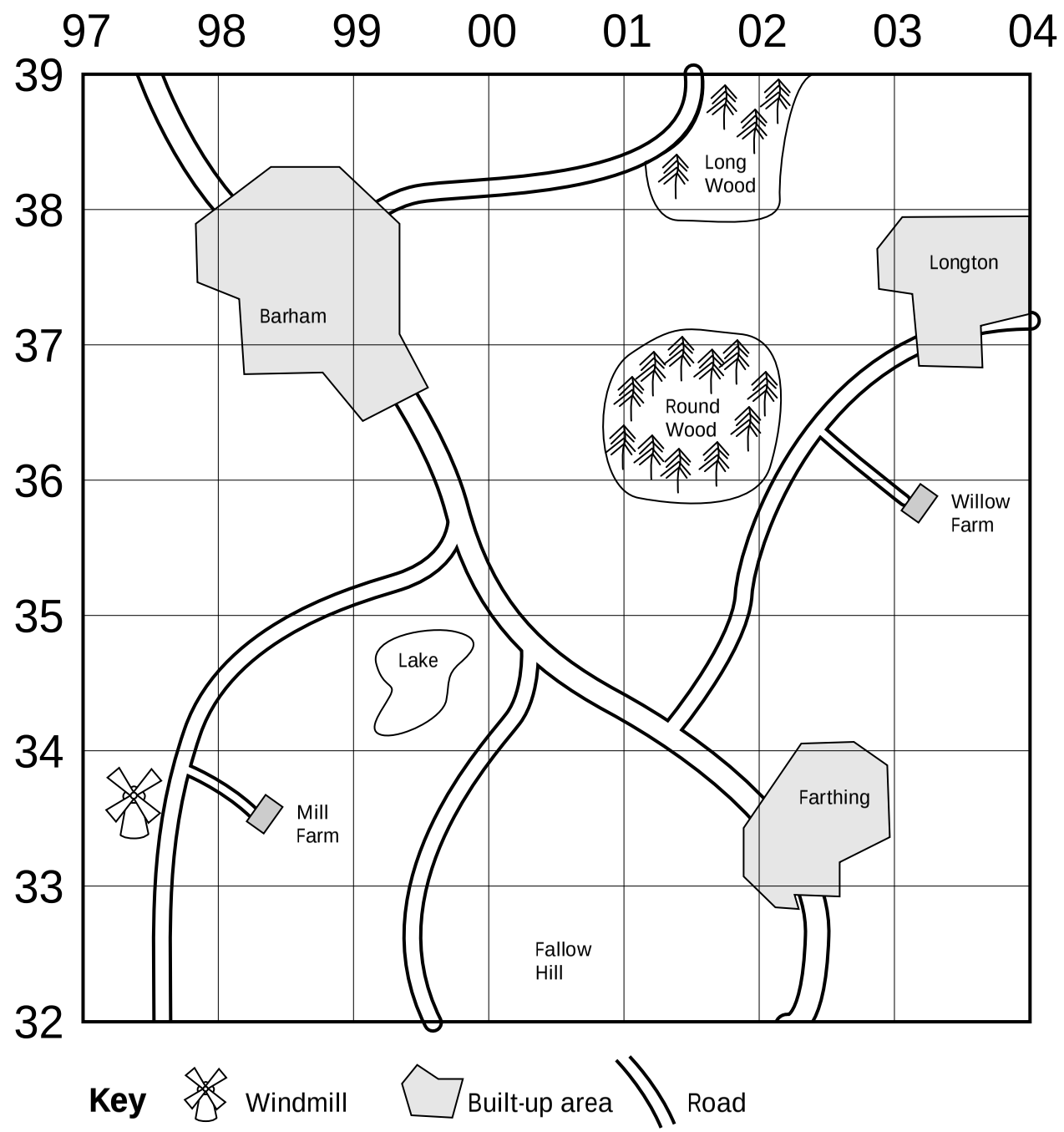

Set 1: Geographical Skills Poster 3: 4-figure Grid References

TEACHER'S NOTES

National Curriculum

This poster concentrates on the skill of using four-figure grid references. It is particularly appropriate to pupils achieving level 4.

Activities

Four-figure grid references are the easier of the grid references. However they are considerably more difficult than letter/number co-ordinates.

The main difficulty is that the numbers are the end of, and refer to, the lines of the grid themselves, rather than to the columns in between. There are several ways of finding a four-figure reference, but the bottom left corner approach is very successful. It is useful for the pupil to be able to draw the arrow onto the map when starting. Clearly, however, this practice must be dropped when working with real maps.

This poster has avoided reference to the names and numbers at the edges of the map. The numbers at the top and bottom are called Eastings (they increase towards the East) and the numbers at the sides are Northings (increase towards the North). It is not necessary to know these names to be able to give a reference. You may, however, decide to mention them to some pupils.

It is very important to stress that the numbers at the top and bottom are given before those at the sides. There are several ways of remembering to look at the numbers across before looking at those going up. One of the most common is to remember that we "go into the house before we climb the stairs". I must admit that I have never found this completely satisfactory and I tend to rely on reinforcing the point several times.

"In the house and up the stairs"

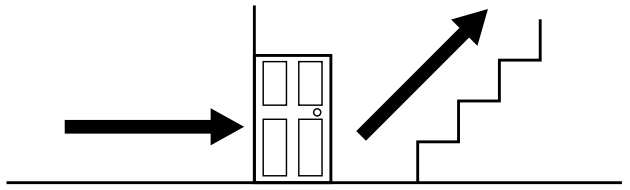

The map exercise is a good way to start to develop the skill of giving a four-figure grid reference. Pupils can draw arrows onto the map if they need to. The answers are:

1	9837	2	0233
3	0337	4	0136
5	0138	6	9733
7	0032	8	9934
9	9833	10	0335

Extension activities

One way of practising four-figure references is to play noughts and crosses – as long as the pupils are confident enough. One person can play another or have two teams. This grid (see below) is put up on a board or screen. The first person or team tries to place an X in the grid by giving the correct reference. The next team answers with a O. If the reference falls outside the grid, or the square is already occupied, the player/team loses that go. You may prefer them to have another chance.

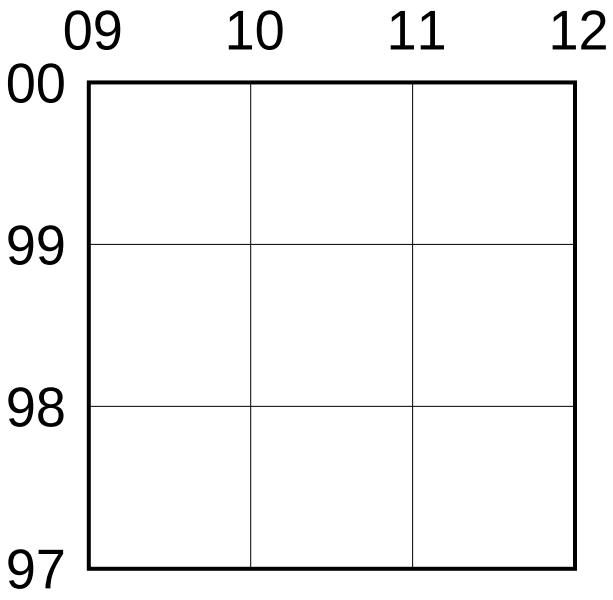

A local 1:50 000 Ordnance Survey map is ideal for developing the skill. Pupils can locate the square in which their school or home is located, as well as other features. This method is ideal for locating villages on a rural map.

The map below is a more detailed version of the Treasure Island map from Poster 2, with grid squares numbered, instead of a number and letter reference system. It can be used to practice four-figure grid references on material that the pupils may already be familiar with.

Cross-curricular links

Maths

Grid and grid references.

History

Study the local area especially sites of antiquity.

English

Use an Ordnance Survey map to identify locations and write a story based around them.

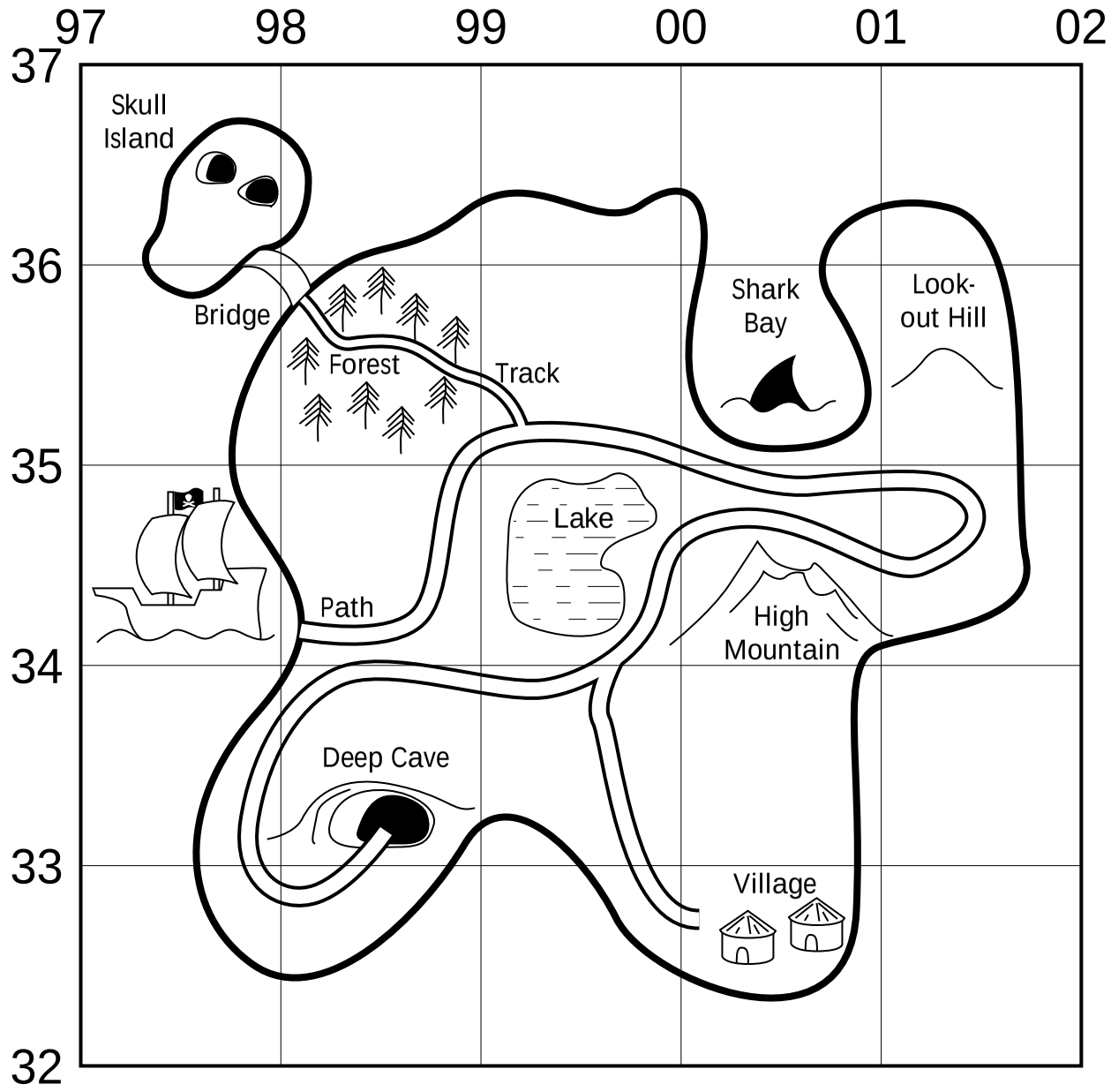

Pearson Publishing, Chesterton Mill, French's Road, Cambridge CB4 3NP Tel 01223 350555

Name .....

Recording the Weather

Class .....

The weather changes from day to day. We need to be able to measure different aspects of the weather and keep records of what we have found.

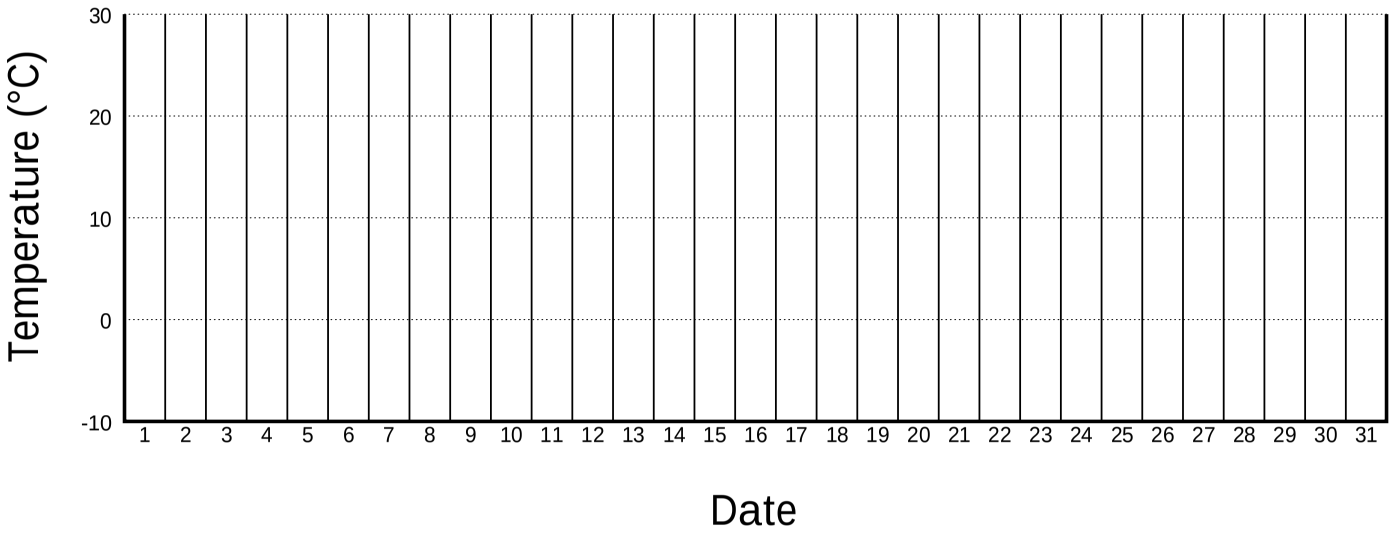

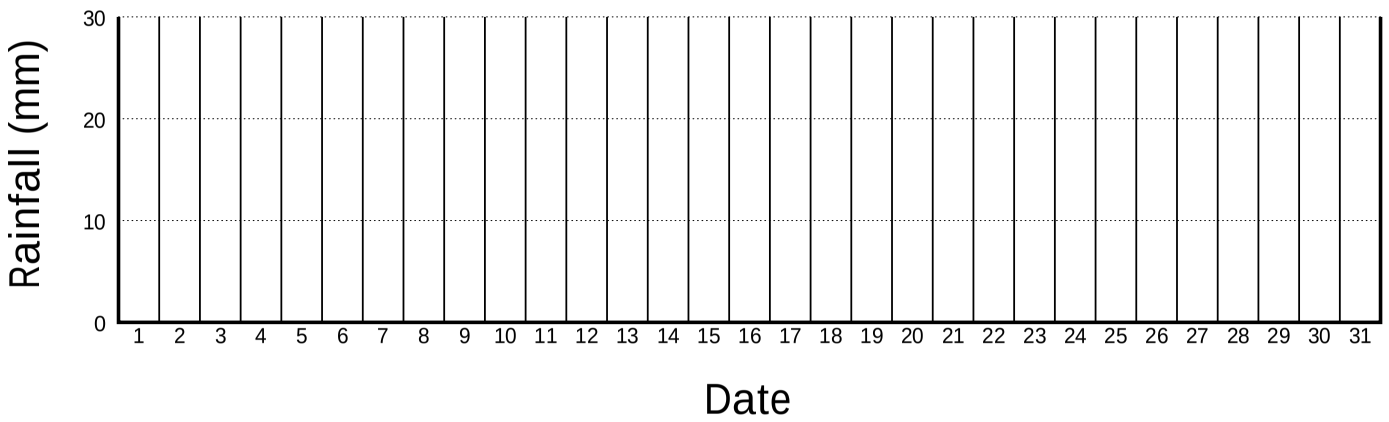

Use the two charts given above to record rainfall and temperature over a month. Your teacher will explain how you should do this.

When you have coloured in the map and key it will show how much rain falls in different parts of Britain. This is the average amount which falls in a year. Find your local area on the map. How much rain falls in your area in a year, on average?

_____

Which parts of Britain are wetter or drier than your area?

_____

Key

- ☐ Very wet
  Over 1250 mm of rain
- ☐ Wet
  750-1250 mm of rain
- ☐ Dry
  Under 750 mm of rain

Set 1: Geographical Skills Poster 10: Recording the Weather

TEACHER'S NOTES

National Curriculum

This poster provides a recording sheet for pupils measuring the weather. The poster also helps pupils to recognise the pattern of rainfall across the British Isles. This poster is appropriate for pupils who are achieving level 4.

Activities

This poster follows on from the previous weather poster in which pupils were observing the weather and keeping a record using a chart.

In this work, the pupil is encouraged to measure aspects of the weather using simple equipment. This may be purchased, or made – perhaps by the pupils themselves. Simple weather measuring kits are available very cheaply in some toy shops. However, these are very basic. More accurate equipment can be purchased from:

Hope Education Ltd, Orb Mill, Huddersfield Road, Oldham, Lancashire OL4 2ST. Tel 0161 633 6611

The instruments should be read at about the same time every day.

Extension activities

Rainfall

A diagram of a simple rain gauge follows. It has many features which are designed to ensure accuracy. However, almost any small container will do for an approximate measurement. A small, transparent cylindrical container is good for measuring small amounts. The scale should be marked to show the depth in mm.

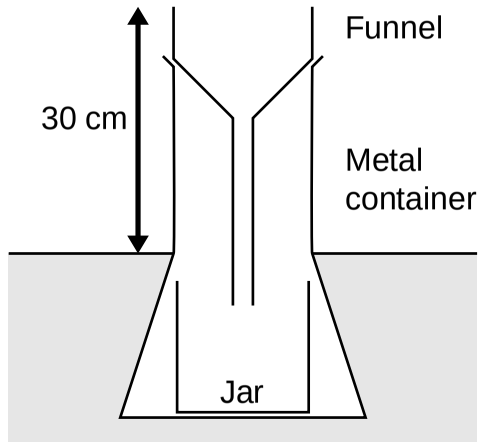

The gauge should be located where it is not sheltered from rain, where it will not catch drips from trees or buildings, and not be interfered with.

Temperature

Thermometers are relatively inexpensive and most pupils will learn quickly how to use them. Air temperature should always be measured in the shade. There are many types of thermometer. Some need to be swung around like a football rattle! A more complicated thermometer records the maximum and minimum temperatures measured since the instrument was last reset. Note: Care should be taken if using mercury thermometers as mercury is poisonous.

Climate graphs

The average monthly temperature and rainfall for an area is normally shown on a climate graph. This comes in two parts: temperature is shown at the top, by means of a line graph and rainfall is shown by means of a bar graph. It is probably easier to plot them separately.

This idea can be adapted to record the temperature and rainfall recorded during a week, or month. The main problem is that readings will probably not be taken at weekends.

An example of a completed weather log follows.

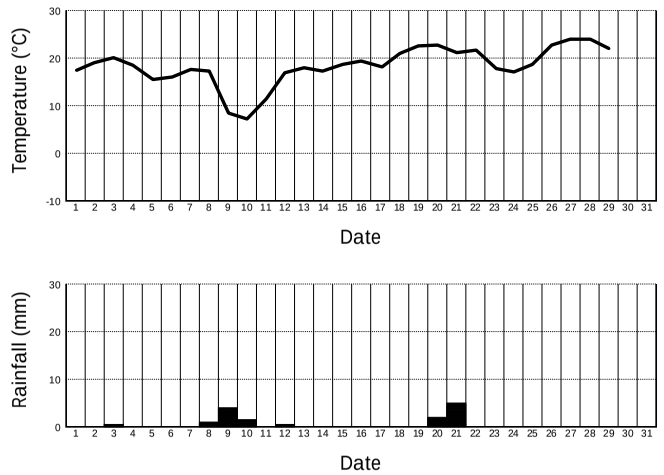

Rainfall distribution map

The pupils are given a simple distribution map which once coloured in correctly, will give a general picture of the average rainfall in different parts of the British Isles. Pupils should be asked to locate their own area on the map, find the average annual rainfall, and see which areas may have higher or lower totals. Atlases will be useful for this work. This is a good introduction to working with such maps, and atlases will include other examples to look at. Summer and winter temperatures, and hours of sunshine are related topics which you may like to follow up.

An example of an average rainfall distribution map has been included here. It should be photocopied and given to the children to copy, unless you find a suitable alternative in an atlas.

Cross-curricular links

Maths

Plotting graphs and charts.

Science

Explanation of the sources of rainfall, wind etc.

Design and Technology

Making simple weather measuring equipment.

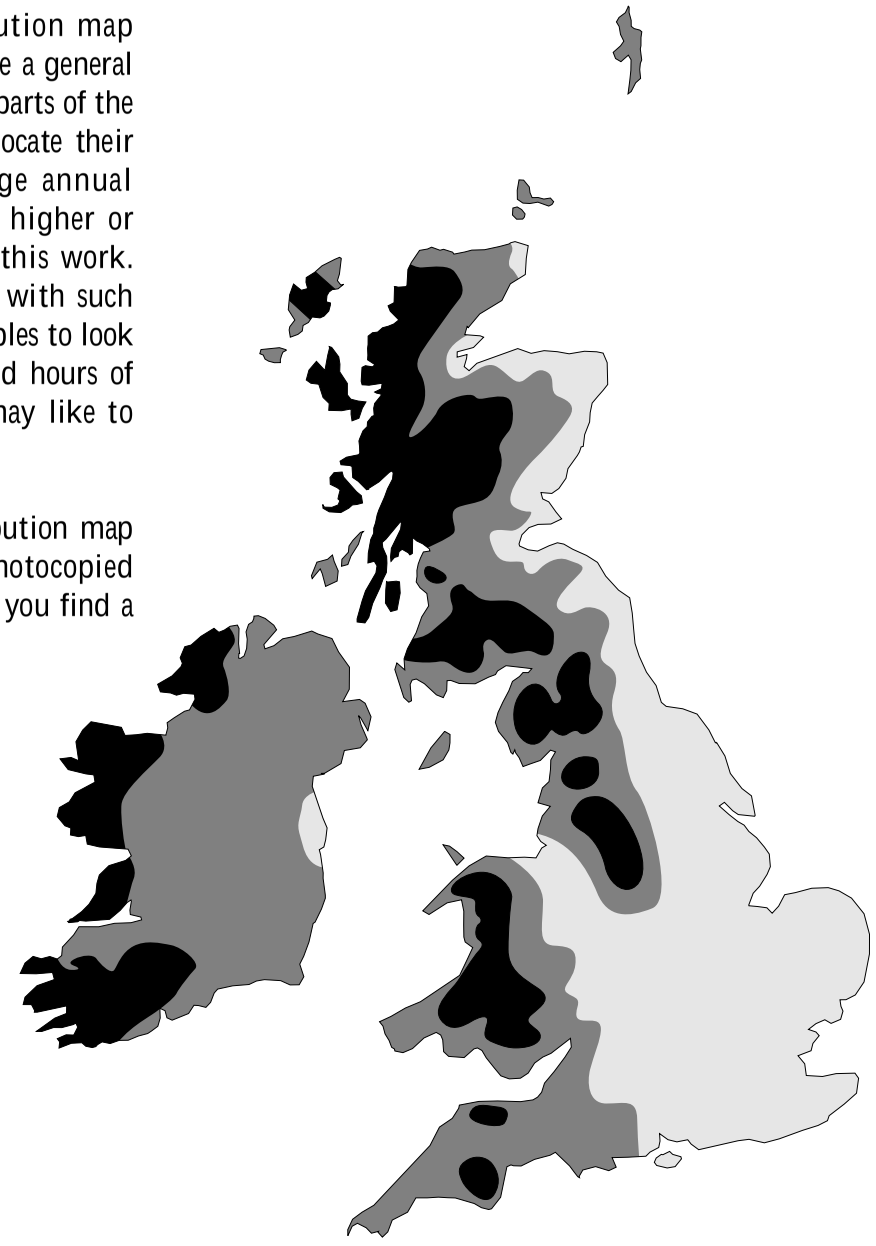

Pearson Publishing, Chesterton Mill, French's Road, Cambridge CB4 3NP Tel 01223 350555